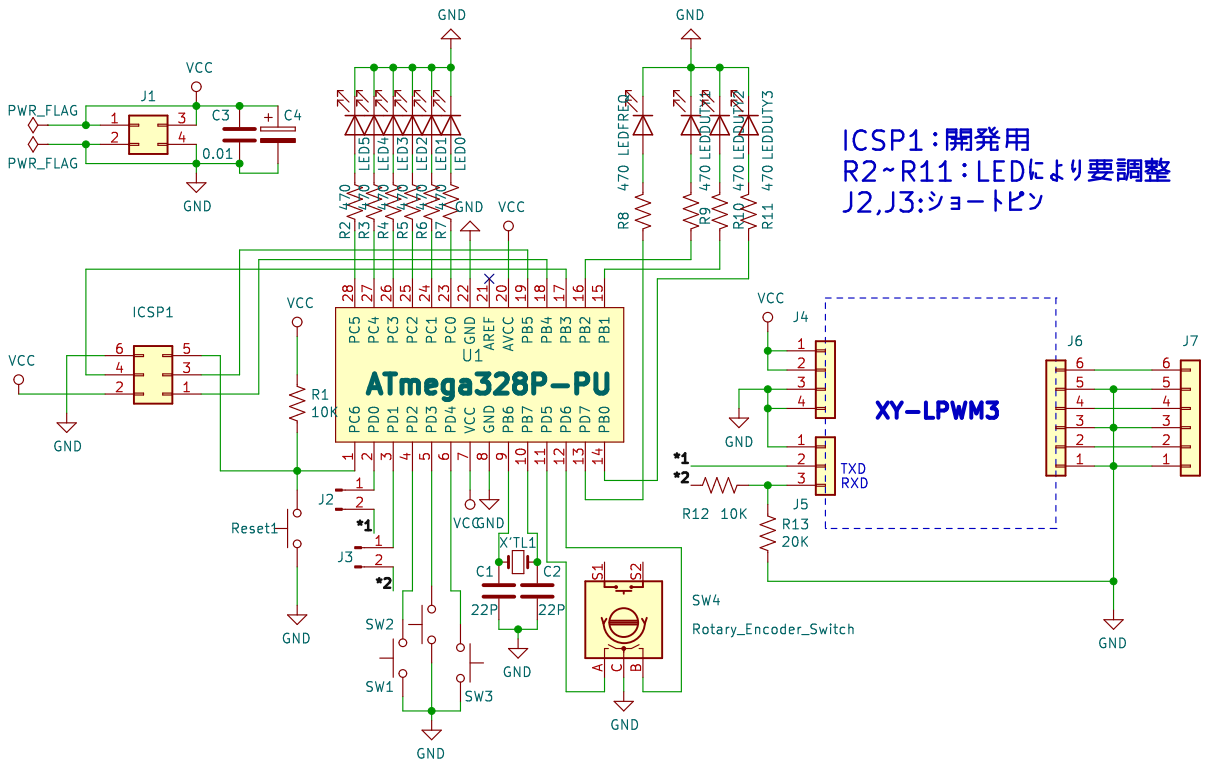

Sheet: /
File: XY-LPWM3 controller.kicad_sch

Title: XY-LPWM3 Controller

Size: A4	Date: 2026-06-08	Rev: v1.0
KiCad E.D.A. kicad (6.0.10)		Id: 1/1